REVISION HISTORY			
REV.	DESCRIPTION OF CHANGE	DATE	SIGN

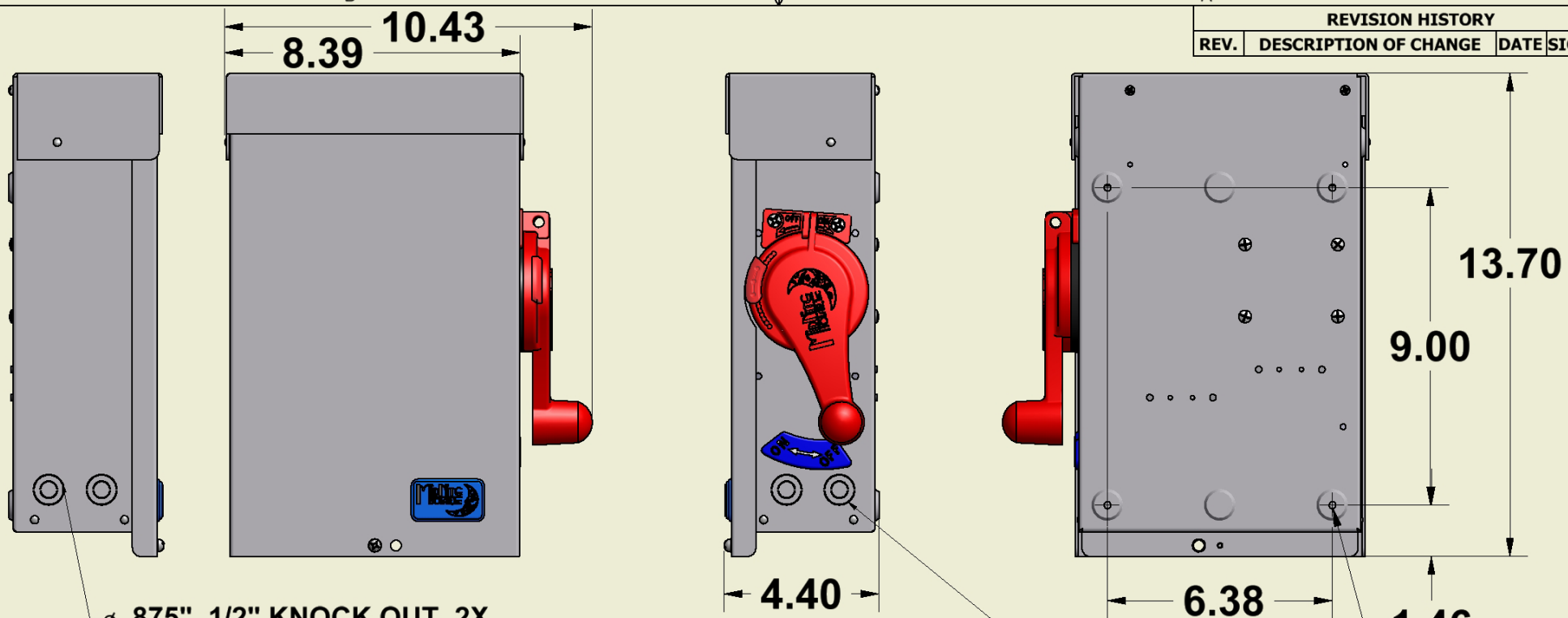

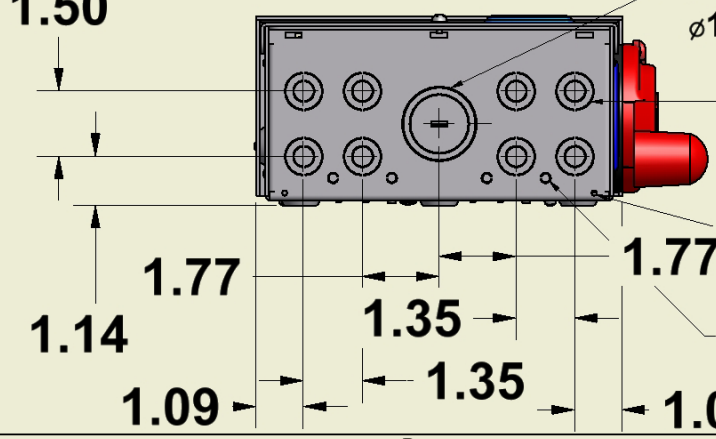

MIDNITE SOLAR	E-FILE:MNPV4HV REV A DISCO 3R.iam	SHEET 7 OF 7