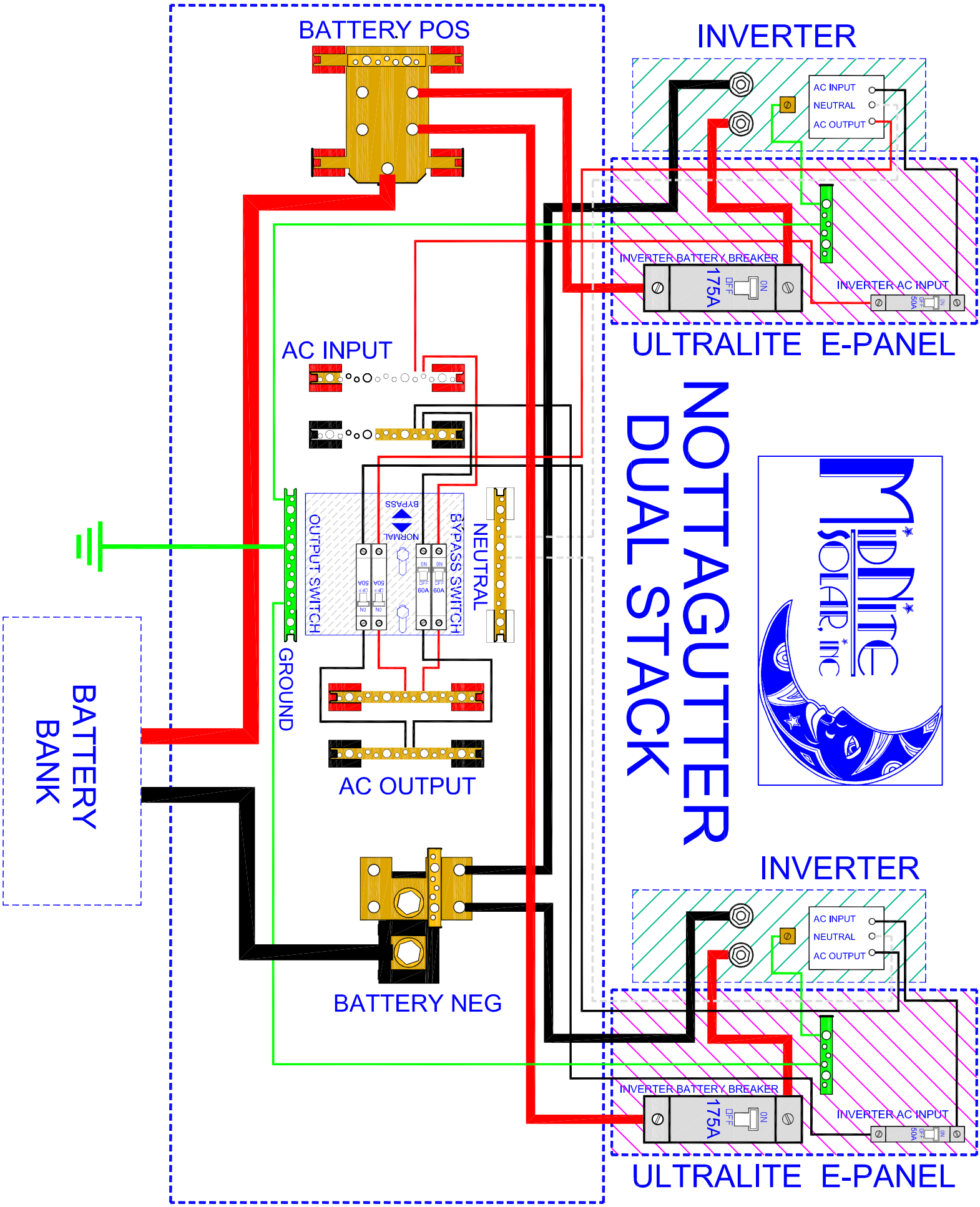
BATTERY POS
INVERTER
AC INPUT
NEUTRAL
AC OUTPUT
INVERTER BATTERY BREAKER
175A
ON
OFF
INVERTER AC INPUT
50A
ULTRALITE E-PANEL
AC INPUT
NOTTAGUTTER
DUAL STACK
BYPASS
NORMAL
OUTPUT SWITCH
BYPASS SWITCH
NEUTRAL
GROUND
60A
BATTERY
BANK
AC OUTPUT
BATTERY NEG
INVERTER
AC INPUT
NEUTRAL
AC OUTPUT
INVERTER BATTERY BREAKER
175A
ON
OFF
INVERTER AC INPUT
50A
ULTRALITE E-PANEL